DATA SHEET

Three Phase Induction Motor - Squirrel Cage

Customer	:

Product line	: W21 Explosion-proof Motor NEMA Premium Efficiency Three-Phase	Product code :	15258331

Frame	: L215T	Locked rotor time	: 27s (cold) 15s (hot)
Output	: 10 HP (7.5 kW)	Temperature rise	: 80 K
Poles	: 4	Duty cycle	: Cont.(S1)
Frequency	: 60 Hz	Ambient temperature	: -20°C to +40°C
Rated voltage	: 575 V	Altitude	: 1000 m.a.s.l.
Rated current	: 10.2 A	Protection degree	: IP55
L. R. Amperes	: 66.0 A	Cooling method	: IC411 - TEFC
LRC	: 6.5x(Code H)	Mounting	: F-1
No load current	: 4.40 A	Rotation¹	: Both (CW and CCW)
Rated speed	: 1765 rpm	Noise level²	: 58.0 dB(A)
Slip	: 1.94 %	Starting method	: Direct On Line
Rated torque	: 29.8 ft.lb	Approx. weight³	: 224 lb
Locked rotor torque	: 210 %		
Breakdown torque	: 270 %		
Insulation class	: F		
Service factor	: 1.15		
Moment of inertia (J)	: 1.34 sq.ft.lb		
Design	: B		

Output	50%	75%	100%
Efficiency (%)	90.2	91.0	91.7
Power Factor	0.62	0.75	0.81

Foundation loads	
Max. traction	: 341 lb
Max. compression	: 565 lb

		Drive end	Non drive end
Bearing type	:	6308 2RS	6207 2RS
Sealing	:	Oil Seal	Lip Seal
Lubrication interval	:	-	-
Lubricant amount	:	-	-
Lubricant type	:	Mobil Polyrex EM	

Notes

This revision replaces and cancel the previous one, which must be eliminated.
(1) Looking the motor from the shaft end.
(2) Measured at 1m and with tolerance of +3dB(A).
(3) Approximate weight subject to changes after manufacturing process.
(4) At 100% of full load.

These are average values based on tests with sinusoidal power supply, subject to the tolerances stipulated in NEMA MG-1.

Rev.	Changes Summary	Performed	Checked	Date

Performed by				
Checked by			Page	Revision
Date	11/09/2020		1 / 6	

This document is exclusive property of WEG S/A. Reprinting is not allowed without written authorization of WEG S/A.
Subject to change without notice

Thermal protection

ID	Application	Type	Quantity	Sensing Temperature
1	Winding	Thermostat - 2 wires	1 x Phase	155 ºC

This document is exclusive property of WEG S/A. Reprinting is not allowed without written authorization of WEG S/A.
Subject to change without notice

TORQUE AND CURRENT VS SPEED CURVE

Three Phase Induction Motor - Squirrel Cage

Customer	:

Product line	: W21 Explosion-proof Motor NEMA Premium Efficiency Three-Phase	Product code :	15258331

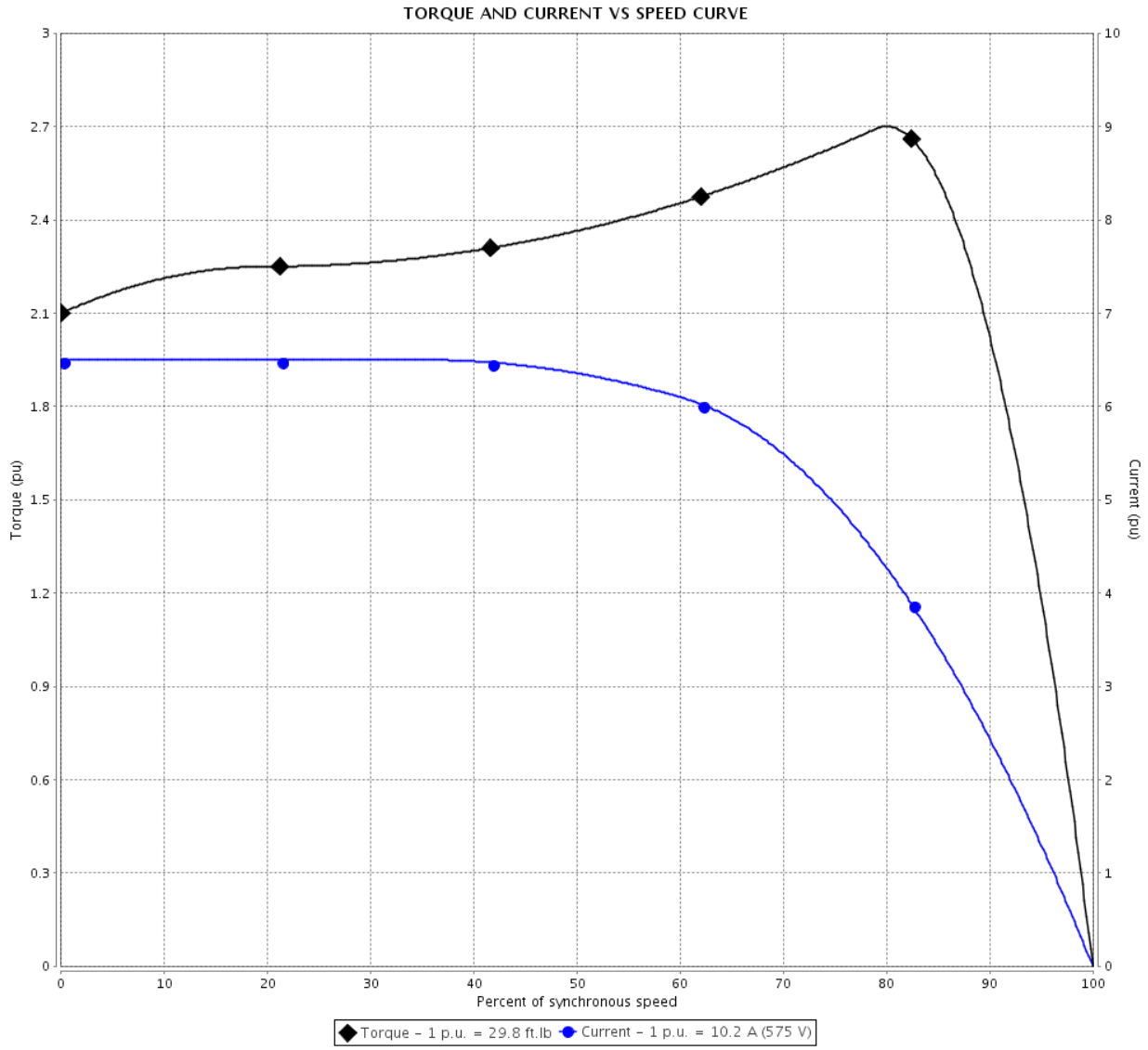

Performance	: 575 V 60 Hz 4P

Rated current	: 10.2 A	Moment of inertia (J)	: 1.34 sq.ft.lb
LRC	: 6.5	Duty cycle	: Cont.(S1)
Rated torque	: 29.8 ft.lb	Insulation class	: F
Locked rotor torque	: 210 %	Service factor	: 1.15
Breakdown torque	: 270 %	Temperature rise	: 80 K
Rated speed	: 1765 rpm	Design	: B

Locked rotor time	: 27s (cold) 15s (hot)

Rev.	Changes Summary	Performed	Checked	Date

Performed by				
Checked by			Page	Revision
Date	11/09/2020		3 / 6	

This document is exclusive property of WEG S/A. Reprinting is not allowed without written authorization of WEG S/A.
Subject to change without notice

LOAD PERFORMANCE CURVE

Three Phase Induction Motor - Squirrel Cage

Customer	:		
Product line	: W21 Explosion-proof Motor NEMA Premium Efficiency Three-Phase	Product code :	15258331

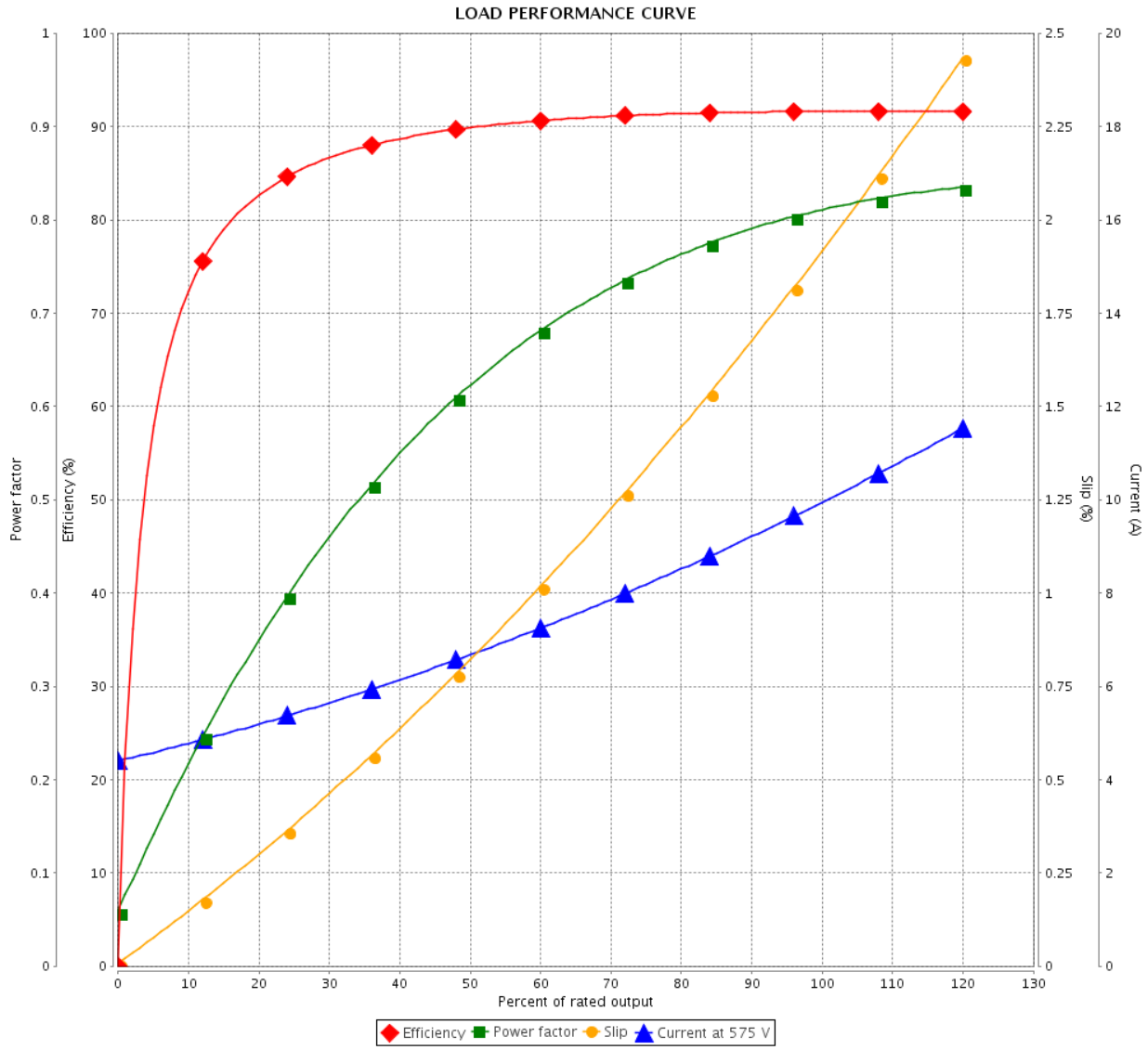

Performance	: 575 V 60 Hz 4P		
Rated current	: 10.2 A	Moment of inertia (J)	: 1.34 sq.ft.lb
LRC	: 6.5	Duty cycle	: Cont.(S1)
Rated torque	: 29.8 ft.lb	Insulation class	: F
Locked rotor torque	: 210 %	Service factor	: 1.15
Breakdown torque	: 270 %	Temperature rise	: 80 K
Rated speed	: 1765 rpm	Design	: B

Rev.	Changes Summary	Performed	Checked	Date

Performed by				
Checked by			Page	Revision
Date	11/09/2020		4 / 6	

This document is exclusive property of WEG S/A. Reprinting is not allowed without written authorization of WEG S/A.
Subject to change without notice

THERMAL LIMIT CURVE

Three Phase Induction Motor - Squirrel Cage

Customer	:		
Product line	: W21 Explosion-proof Motor NEMA Premium Efficiency Three-Phase	Product code :	15258331

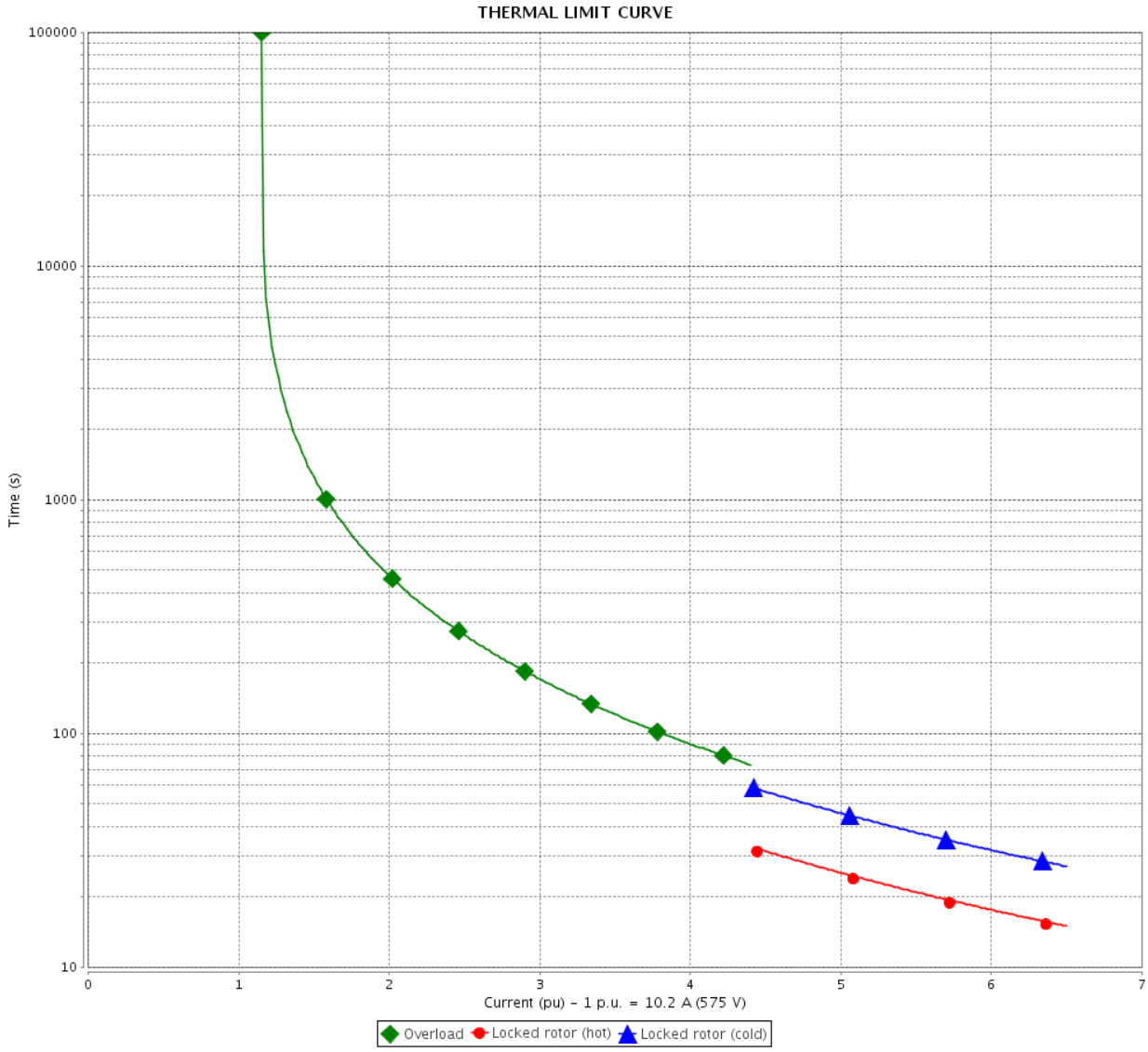

Performance	: 575 V 60 Hz 4P		
Rated current	: 10.2 A	Moment of inertia (J)	: 1.34 sq.ft.lb
LRC	: 6.5	Duty cycle	: Cont.(S1)
Rated torque	: 29.8 ft.lb	Insulation class	: F
Locked rotor torque	: 210 %	Service factor	: 1.15
Breakdown torque	: 270 %	Temperature rise	: 80 K
Rated speed	: 1765 rpm	Design	: B
Heating constant			
Cooling constant			

Rev.	Changes Summary	Performed	Checked	Date

Performed by				
Checked by			Page	Revision
Date	11/09/2020		5 / 6	

This document is exclusive property of WEG S/A. Reprinting is not allowed without written authorization of WEG S/A.
Subject to change without notice

VFD OPERATION CURVE

Three Phase Induction Motor - Squirrel Cage

Customer	:		
Product line	: W21 Explosion-proof Motor NEMA Premium Efficiency Three-Phase	Product code :	15258331

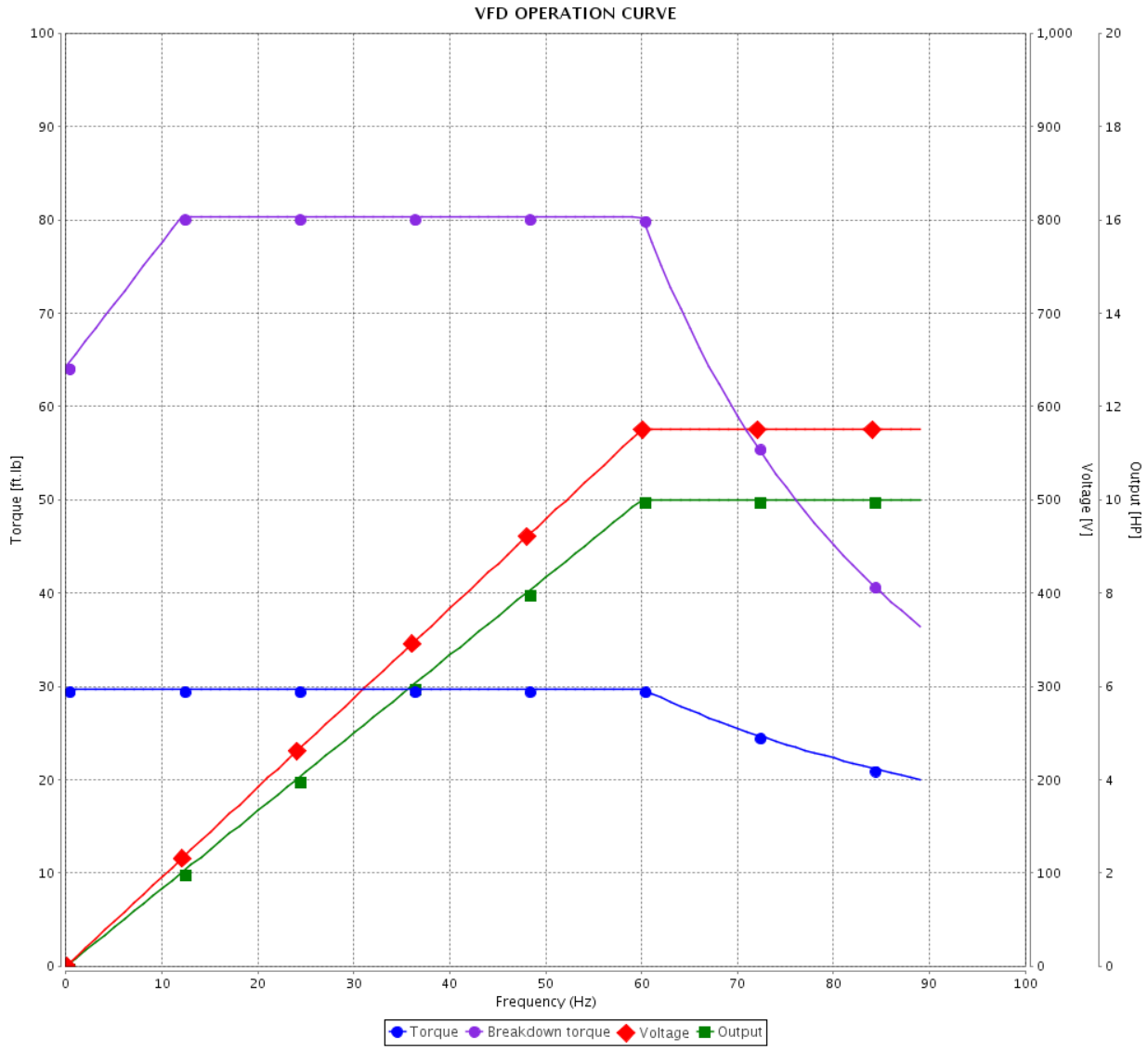

Performance	: 575 V 60 Hz 4P		
Rated current	: 10.2 A	Moment of inertia (J)	: 1.34 sq.ft.lb
LRC	: 6.5	Duty cycle	: Cont.(S1)
Rated torque	: 29.8 ft.lb	Insulation class	: F
Locked rotor torque	: 210 %	Service factor	: 1.15
Breakdown torque	: 270 %	Temperature rise	: 80 K
Rated speed	: 1765 rpm	Design	: B

Rev.	Changes Summary	Performed	Checked	Date

Performed by				
Checked by			Page	Revision
Date	11/09/2020		6 / 6	

This document is exclusive property of WEG S/A. Reprinting is not allowed without written authorization of WEG S/A.
Subject to change without notice

EIXO/SHAFT	
PADRÃO/STANDARD	X
OPCIONAL/OPTIONAL	
ESPECIAL/SPECIAL	

Dimensões em polegada
Dimensions in inches

CERTIFIED
WEG MOTORES
Certified document.
Not subject to changes.

THIS IS AN UPDATED REVISION, THE PREVIOUS ONE MUST BE DISREGARDED.

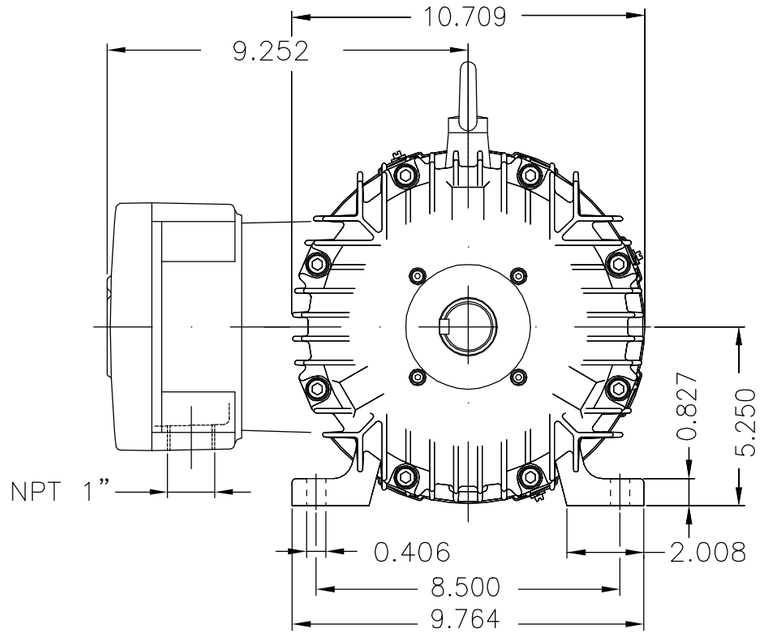

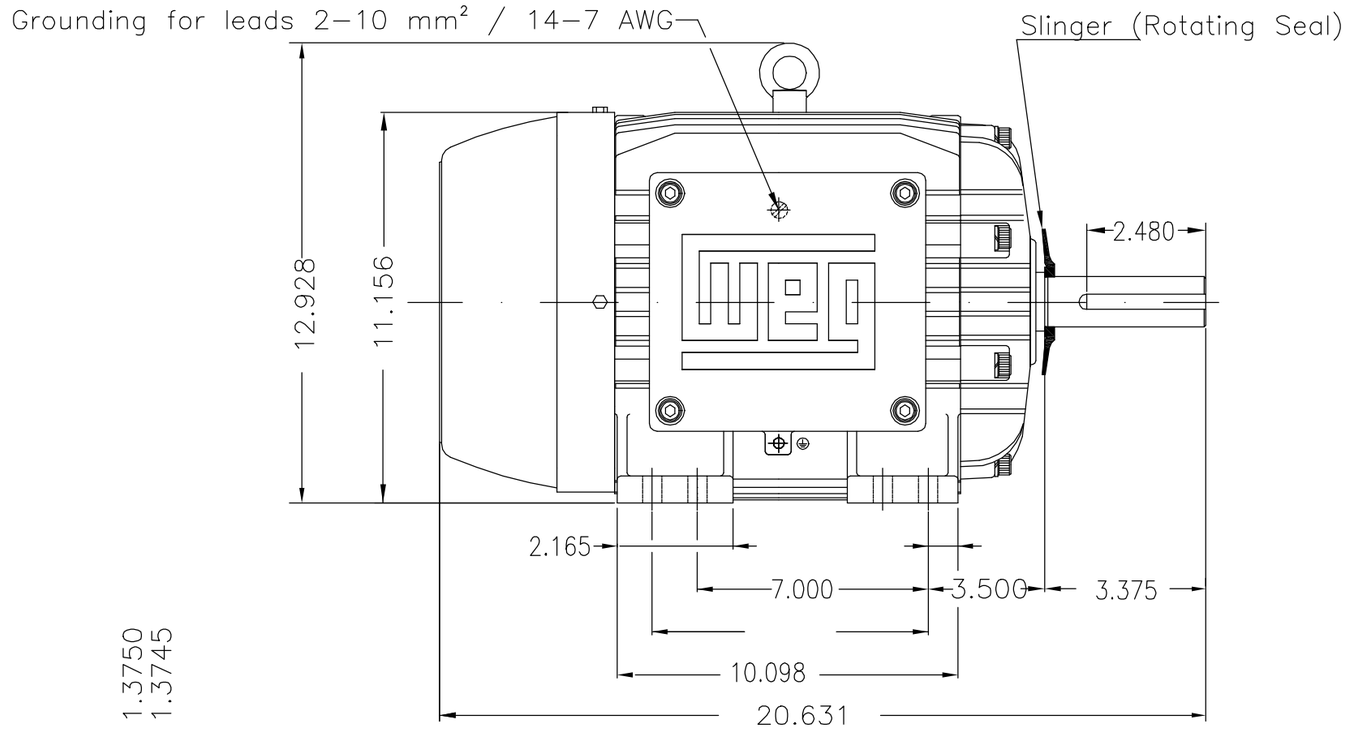

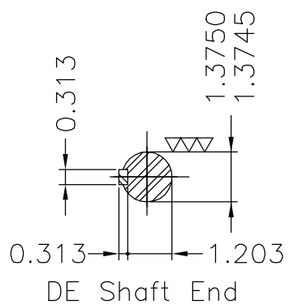

Cor RAL 5009 / Color RAL 5009
Plano de pintura 205P / Painting plan 205P
Forma construtiva NEMA F-1 / Mounting NEMA F-1
Forma construtiva B3D / Mounting B3R(D)

V.J. PAMENSKY CANADA INC.

OV: 4803520

ECM	LOC	SUMMARY OF MODIFICATIONS	EXECUTED	CHECKED	RELEASED	DATE	VER
500001594952		ALTERADO CONF. CLAIM 415204042	RICLAV	DALTONR	DALTONR	27.05.2019	01
500001432072		DOCUMENTO NOVO	RLOPES	PIRWBUSER	PIRWBUSER	22.03.2018	00

EXECUTED	RLOPES	THREE-PHASE EXPLOSION PROOF MOTOR
CHECKED	PIRWBUSER	FRAME L215T IP55 TEFC
RELEASED	PIRWBUSER	
REL DT	22.03.2018	WMO Jaragua do Sul Product Engineering

10005624178
000 01
SHEET 1 / 1

10 HP 04 Poles 60Hz

A

UNCONTROLLED COPY

RELEASED

ZME A3

WEG's property. Forbidden reproduction without previous authorization.